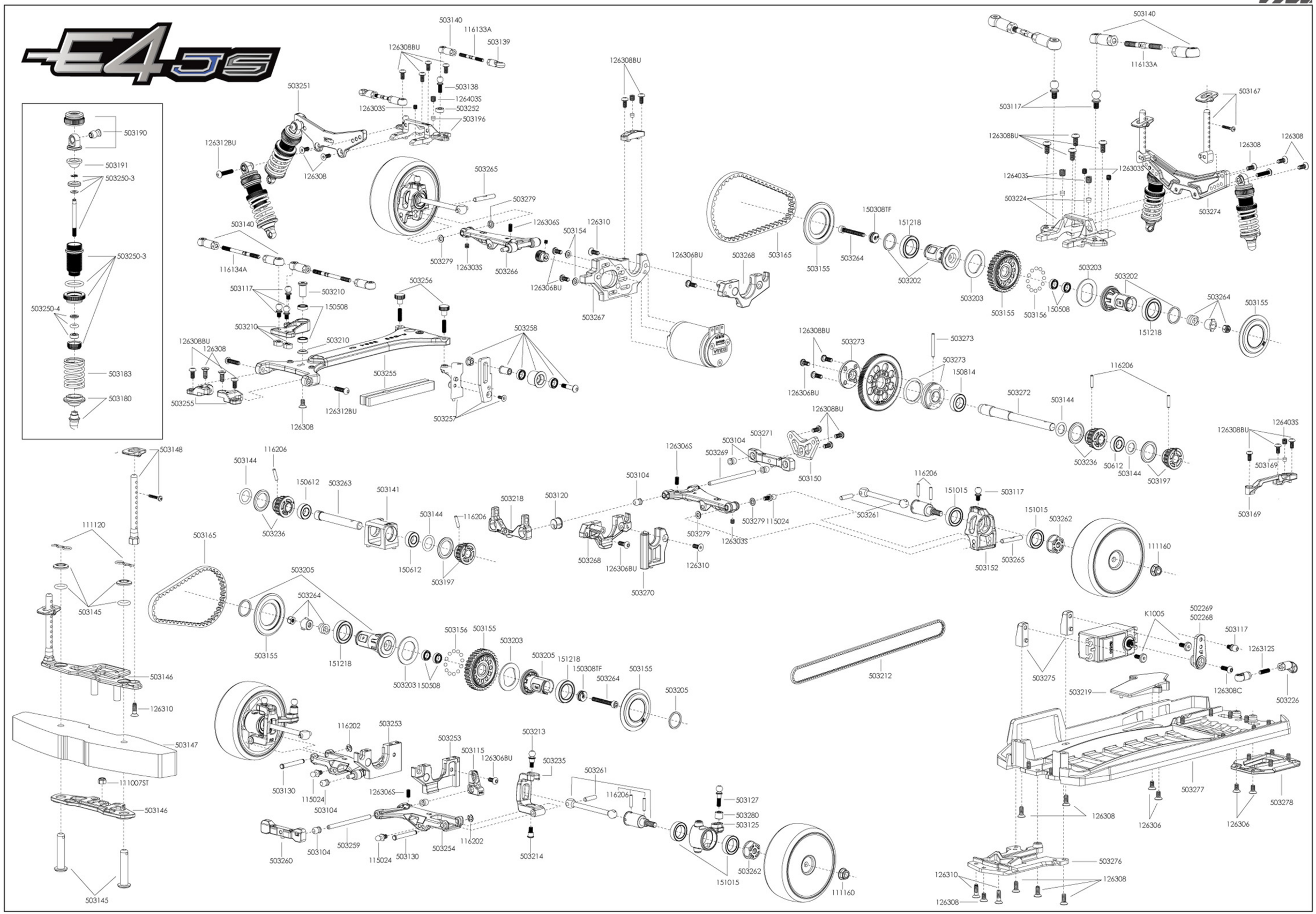
E4JS
503190
503191
503250-3
503250-3
503250-4
503183
503180
503140
116133A
503139
126308BU
503138
126403S
503252
503196
126303S
503251
126312BU
126308
503265
503279
126306S
503154
126310
503140
116134A
503279
126303S
503266
126306BU
503267
503117
503210
150508
503210
503210
503256
126308BU
126308
503255
503255
126312BU
126308
503258
503257
126308BU
503268
503165
503155
150308TF
151218
503264
503202
503203
503155
503156
150508
503203
503202
503264
503155
151218
503167
126308BU
126308
126403S
126303S
503224
503274
503140
116133A
503117
126308BU
503273
503273
503273
150814
126306BU
503272
503144
116206
503236
50612
503144
503197
126308BU
126403S
503169
503169
503148
503144
116206
150612
503263
503141
503236
503144
116206
150612
503197
503218
503120
503104
503269
503271
126306S
503150
503104
503279
115024
126303S
503279
503268
126306BU
126310
503270
116206
151015
503117
503261
151015
503262
503152
503265
111160
111120
503165
503145
503205
503264
503155
151218
503203
150508
503156
503155
503203
503205
151218
150308TF
503264
503155
503205
503146
126310
503147
111007ST
503146
503145
503212
K1005
502269
502268
503117
126312S
503275
503219
126308C
503226
503277
503278
126308
126306
126306
503276
126310
126308
126308
116202
503253
503253
503115
126306BU
503213
503235
503261
116206
503130
115024
503104
126306S
503127
503280
503125
503260
503104
503259
115024
503130
503254
116202
503214
503262
151015
111160